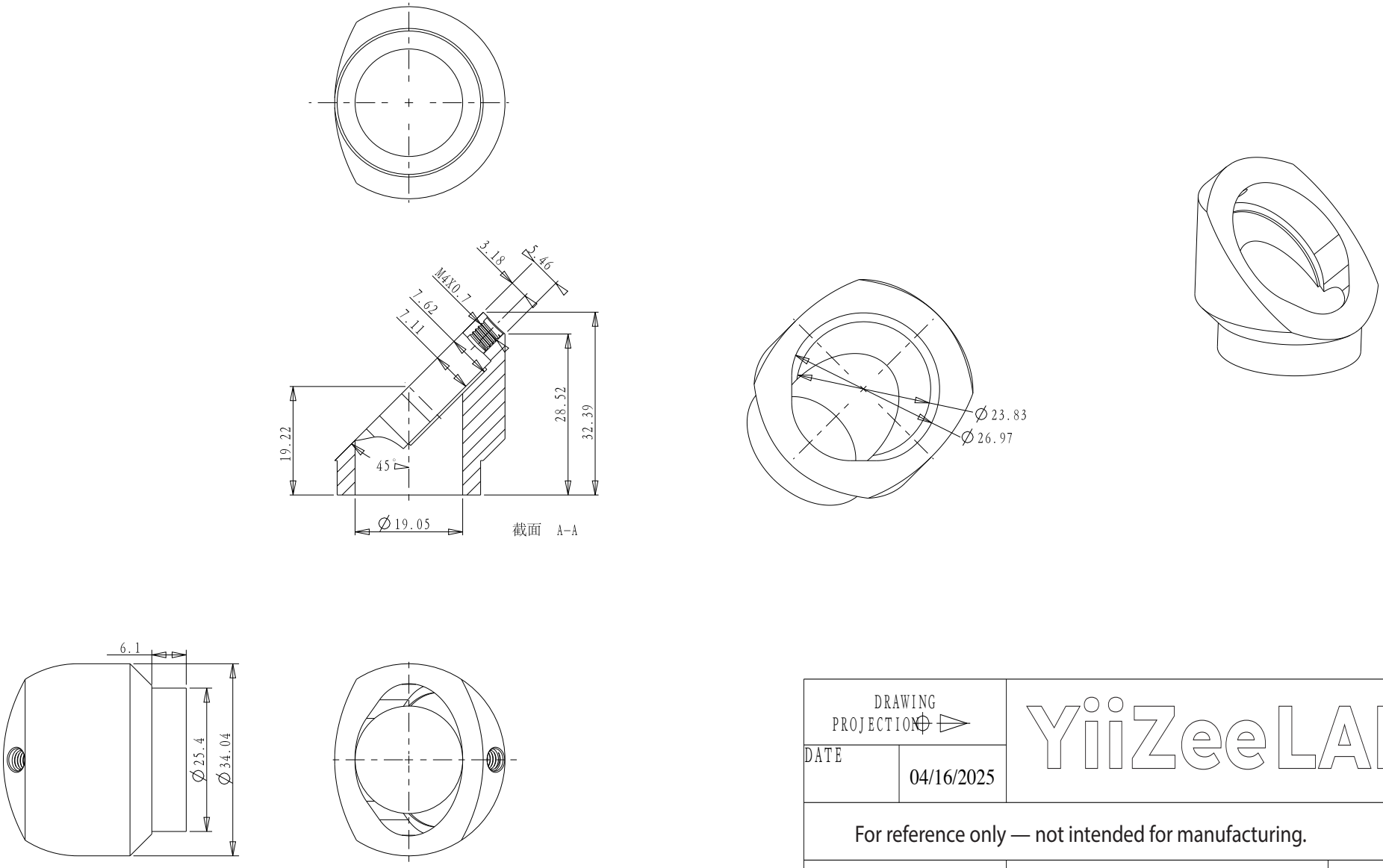

DRAWING PROJECTION	YiiZeeLABS	
DATE 04/16/2025		
For reference only — not intended for manufacturing.		
	MATERIAL #	REV
COPYRIGHT © YiiZeeLABS		A
VALUSE IN PARENTHESIS ARE CALCULATED AND MAY CONTAIN ROUNDOFF ERRORS	APPROX WEIGHT	kg